MOTOROLA MODEL A24 CHASSIS HS-4136

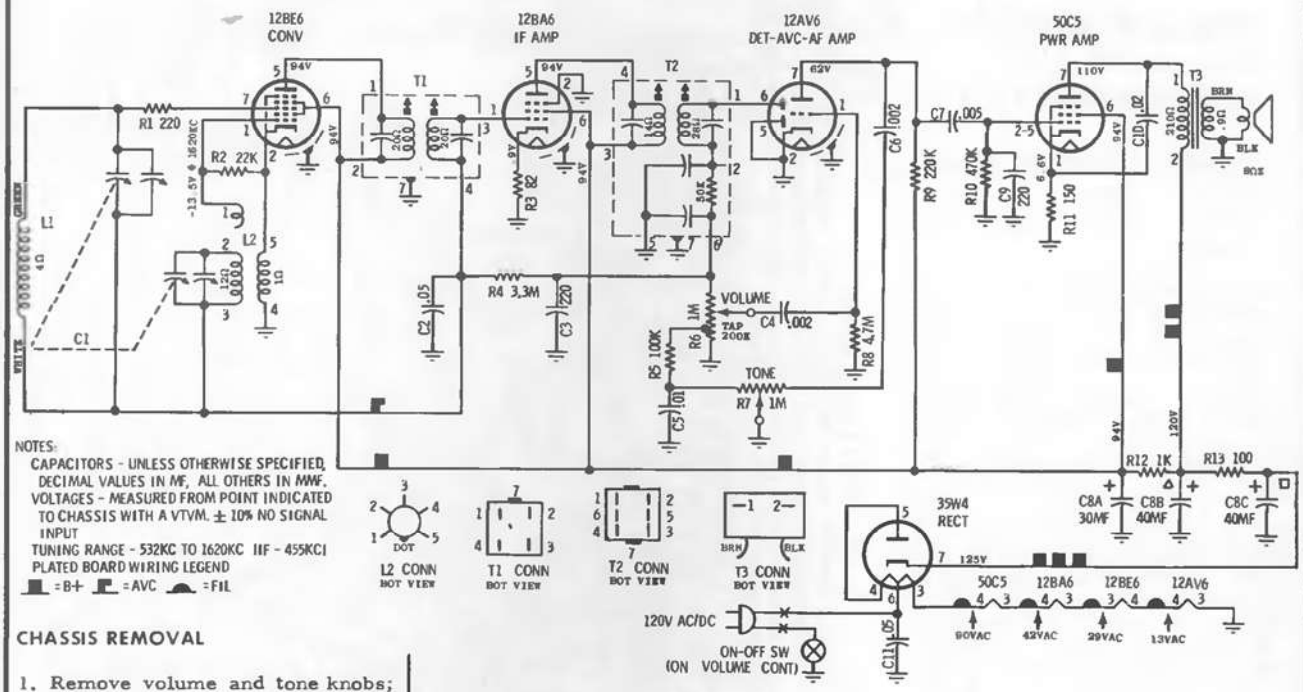

NOTES:
CAPACITORS - UNLESS OTHERWISE SPECIFIED, DECIMAL VALUES IN MF, ALL OTHERS IN MMF.
VOLTAGES - MEASURED FROM POINT INDICATED TO CHASSIS WITH A VTVM. ± 10% NO SIGNAL INPUT
TUNING RANGE - 532KC TO 1620KC IIF - 455KC
PLATED BOARD WIRING LEGEND
= B+ = AVC = FIL

CHASSIS REMOVAL

1. Remove volume and tone knobs; do not attempt to remove captivated tuning knob.

2. Remove cabinet back - 4 screws hold it in place.

3. From rear, remove chassis mounting screw at base of chassis, if necessary, also remove two gang mounting screws.

4. Unsolder speaker leads (and gang leads, if gang was not removed in Step 3).

5. Slide chassis and antenna out of cabinet.

TUNING KNOB REMOVAL

1. Remove cabinet back - 4 screws hold it in place.

2. From rear, remove two gang mounting screws and pull back gang.

3. To remove tuning knob, remove speed clip from knob shank from rear of knob.

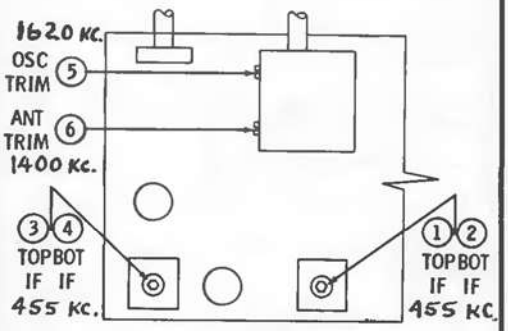
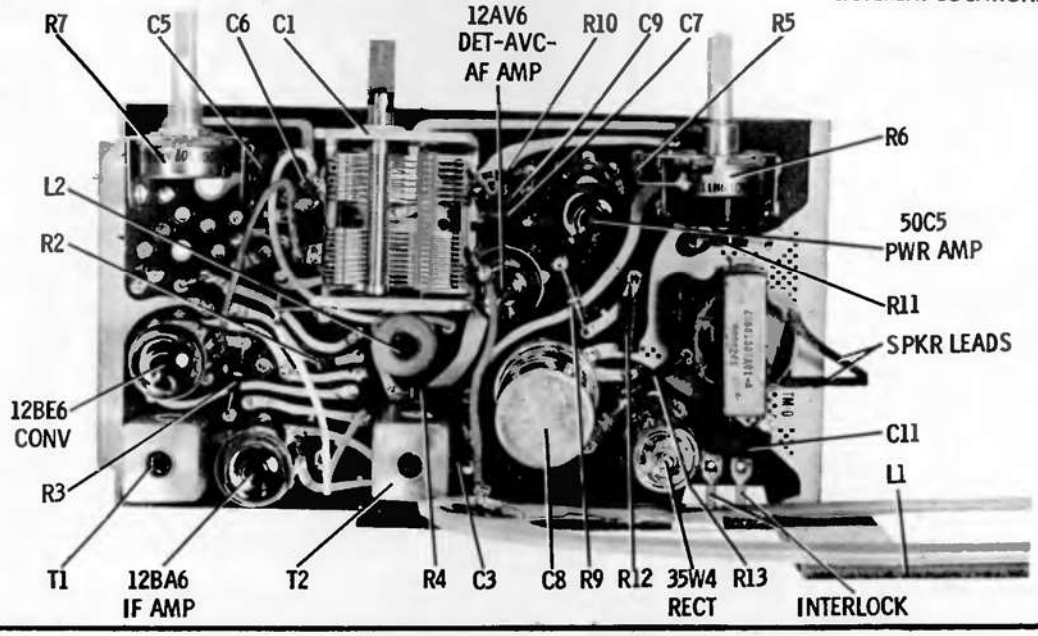
ALIGNMENT LOCATIONS